MICROWAVE OVEN

BASIC: SMH7185
MODEL: SMH9187ST
MODEL CODE: SMH9187ST/XAC

SERVICE Manual

MICROWAVE OVEN

CONTENTS

1. Precaution
2. Product Specification
3. Disassembly and Reassembly
4. Troubleshooting
5. Exploded Views and Part List
6. PCB Diagrams
7. Wiring Diagrams
8. Schematic Diagrams

Refer to the service manual in the GSPN(see rear cover) for the more information.

• Contents

1. Precaution 3
1-1 Safety precautions 4
1-2 Special High Voltage Precautions 5

2. Specifications 6
2-1 Features 6
2-2 Accessory 7
2-3 Table of Specifications 8

3. Disassembly and Reassembly 9
3-1 Disassembly of Assembly Grille and Panel Outer 9
3-2 Replacement of High Voltage Transformer and HVC and Base bottom 11
3-3 Replacement of Magnetron 13
3-4 Replacement of Door Assembly 14
3-5 Replacement of Fuse 16
3-6 Replacement of Drive Motor 16
3-7 Replacement of stirrer motor 17
3-8 Removal of stirrer 18
3-9 Replacement of Control Circuit Board 19
3-10 Replacement of Cooktop lamp 20
3-11 Replacement of Oven Light 21

4. Troubleshooting 22
4-1 Error Code Numbering Rule 22
4-2 Error Code List 22
4-3 Electrical Malfunction 24

5. Exploded Views and Parts List 27
5-1 Exploded Views 27
5-2 Main Parts List 28
5-3 Door Parts List 30
5-4 Control Parts List 31
5-5 Standard Parts List 32

6. PCB Diagrams 33
6-1 PCB Diagrams 33
6-2 PCB Diagrams 34

7. Wiring Diagrams 35
7-1 Wiring Diagrams 35

8. Schematic Diagrams 37
8-1 Schematic Diagram 37

PRECAUTIONS TO BE OBSERVED BEFORE AND DURING SERVICING TO AVOID POSSIBLE EXPOSURE TO EXCESSIVE MICROWAVE ENERGY

(a) Do not operate or allow the oven to be operated with the door open.

(b) Make the following safety checks on all ovens to be serviced before activating the magnetron or other microwave source, and make repairs as necessary:
(1) Interlock operation,
(2) proper door closing,
(3) seal and sealing surfaces (arcing, wear, and other damage),
(4) damage to or loosening of hinges and latches,
(5) evidence of dropping or abuse.

(c) Before turning on microwave power for any service test or inspection within the microwave generating compartments, check the magnetron, wave guide or transmission line, and cavity for proper alignment, integrity, and connections.

(d) Any defective or misadjusted components in the interlock, monitor, door seal, and microwave generation and transmission systems shall be repaired, replaced, or adjusted by procedures described in this manual before the oven is released to the owner.

(e) A Microwave leakage check to verify compliance with the Federal performance standard should be performed on each oven prior to release to the owner.

1. Precaution

Follow these special safety precautions. Although the microwave oven is completely safe during ordinary use, repair work can be extremely hazardous due to possible exposure to microwave radiation, as well as potentially lethal high voltages and currents.

1-1 Safety precautions (⚠)

1. All repairs should be done in accordance with the procedures described in this manual. This product complies with Federal Performance Standard 21 CFR
2. Microwave emission check should be performed to prior to servicing if the oven is operative.
3. If the oven operates with the door open :Instruct the user not to operate the oven and contact the manufacturer and the center for devices and radiological health immediately.
4. Notify the Central Service Center if the microwave leakage exceeds 5 mW/cm2.
5. Check all grounds.
6. Do not power the MWO from a “2-prong” AC cord. Be sure that all of the built-in protective devices are replaced. Restore any missing protective shields.
7. When reinstalling the chassis and its assemblies, be sure to restore all protective devices, including: nonmetallic control knobs and compartment covers.
8. Make sure that there are no cabinet openings through which people --particularly children--might insert objects and contact dangerous voltages. Examples: Lamp hole,ventilation slots.
9. Inform the manufacturer of any oven foundto have emission in excess of 5 mW/cm2 ,Make repairs to bring the unit into compliance at no cost to owner and try to determine cause. Instruct owner not to use oven until it has been brought into compliance.

   CENTRAL SERVICE CENTER
10. Service technicians should remove their watches while repairing an MWO.
11. To avoid any possible radiation hazard,replace parts in accordance with the wiring diagram. Also, use only the exact replacements for the following parts: Primary and secondary interlock switches, interlock monitor switch.
12. If the fuse is blown by the Interlock Monitor Switch: Replace all of the following at the same time: Primary, door sensing switch and power relay, as well as the Interlock Monitor Switch. The correct adjustment of these switches is described elsewhere in this manual. Make sure that the fuse has the correct rating for the particular model being repaired.
13. Design Alteration Warning: Use exact replacement parts only, i.e.,only those that are specified in thedrawings and parts lists of this manual. This is especially important for the Interlock switches, described above. Never alter or add to the mechanical or electrical design of the MWO. Any design changes or additions will void the manufacturer’s warranty. Always unplug the unit’s AC power cord from the AC power source before attempting to remove or reinstall any component or assembly.
14. Never defeat any of the B+ voltage interlocks. Do not apply AC power to the unit (or any of its assemblies) unless all solid-state heat sinks are correctly installed.
15. Some semiconductor (“solid state”) devices are easily damaged by static electricity. Such components are called Electrostatically Sensitive Devices (ESDs). Examples include integrated circuits and field-effect transistors. Immediately before handling any semiconductor components or assemblies, drain the electrostatic charge from your body by touching a known earth ground.
16. Always connect a test instrument’s ground lead to the instrument chassis ground before connecting the positive lead; always remove the instrument’s ground lead last.
17. When checking the continuity of the witches or transformer, always make sure that the power is OFF, and one of the lead wires is disconnected.
18. Components that are critical for safety are indicated in the circuit diagram by shading, ⚠ or ⚠ .
19. Use replacement components that have the same ratings, especially for flame resistance and dielectric strength specifications. A replacement part that does not have the same safety characteristics as the original might create shock, fire or other hazards.

    NOTE : Connect the oven to a 20A. When connecting the oven to a 15A,make sure that circuit breaker can operate.

1-2 Special High Voltage Precautions

1. High Voltage Warning Do not attempt to measure any of the high voltages --this includes the filament voltage of the magnetron. High voltage is present during any cook cycle. Before touching any components or wiring, always unplug the oven and discharge the high voltage capacitor (See Figure 1-1)
2. The high-voltage capacitor remains charged about 30 seconds after disconnection. Short the negative terminal of the high-voltage capacitor to to the oven chassis. (Use a screwdriver.)
3. High voltage is maintained within specified limits by close-tolerance, safety-related components and adjustments. If the high voltage exceeds the specified limits, check each of the special components.

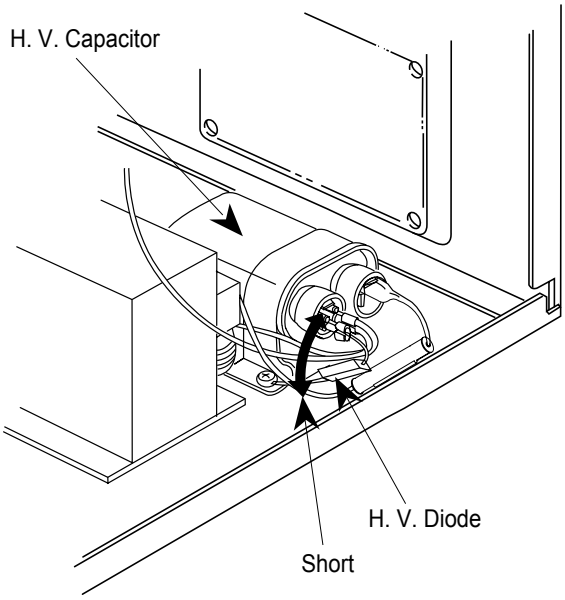

PRECAUTION

There exists HIGH VOLTAGE ELECTRICITY with high current capabilities in the circuits of the HIGH VOLTAGE TRANSFORMER secondary and filament terminals. It is extremely dangerous to work on or near these circuits with the oven energized.

DO NOT measure the voltage in the high voltage circuit including filament voltage of magnetron.

PRECAUTION

Servicemen should remove their watches whenever working close to or replacing the magnetron.

PRECAUTION

Never touch any circuit wiring with your hand nor with uninsulated tool during operation.

2. Specifications

2-1 Features

Product Features	
• Professional Design	Samsung New OTR with Stainless Steel, it has professional look and the design matches great with other kitchen appliances, so that it provides harmonious kitchen interior and finally completes total kitchen solution.
• Turbo vent	With 400CFM ventilation power, New OTR can keep the comfortable cooking condition by absorbing smoke and odor from cook-top. Moreover, it provides the silent condition that is equivalent noise level to other OTR with lower ventilation power. The Strongest power without additional noise! That's the benefit you can feel from New OTR!
• Big Interior capacity for convenience	With the 1.8 cu.ft capacity, it offers enough space to cook. The big capacity combined with 1,100 watts of output achieves superior cooking results.
• Sensor cook	Don't worry about failure of your cooking! New OTR's sensor technology offers the best dish. Only thing you need to do is just select the cooking menu, and then you will be satisfied with the cooking results by sensor cook.
• VFD display	With more informative VFD display, the OTR helps you use all the function it has with ease.

2-2 Accessory

Item	Description	Code No.	Q'ty
	TRAY COOKING	DE74-20002A	1
	ASSY-GUIDE ROLLER	DE97-00368A	1
	ASSY-HOOD DAMPER	DE92-90242D	1
	ASSY-HARD WARE	DE92-90505E	1
	FILTER AIR	DE63-00196A	2
	FILTER CHARCOAL	DE63-00367D	1
	RACK-WIRE	DE75-00036B	1

2-3 Table of Specifications

Items		Basic Model SMH9187ST/XAA SMH9187B/XAA SMH9187W/XAA	New Model SMH9187ST/XAC SMH9187B/XAC SMH9187W/XAC
Oven Cavity		1.8	1.8
Controls		10 power levels, including defrost	10 power levels, including defrost
Timer		99 minutes, 99seconds	99 minutes, 99seconds
Power Source		120VAC, 60Hz	120VAC, 60Hz
Power consumption		1650 Watts	1500 Watts
Power Output		1100 Watts	1000 Watts
Oven Cavity	Dimensions (W x H x D inches)	$20^{7/8}$ x $9^{31/32}$ x $14^{9/16}$	$20^{7/8}$ x $9^{31/32}$ x $14^{9/16}$
Outside		$29^{7/8}$ x $16^{1/2}$ x $15^{15/32}$	$29^{7/8}$ x $16^{1/2}$ x $15^{15/32}$
Shipping		$33^{3/8}$ x $19^{15/16}$ x $19^{13/32}$	$33^{3/8}$ x $19^{15/16}$ x $19^{13/32}$
Net/Gross Weight		51.6Kg / 62.7lbs	51.6Kg / 62.7lbs
Export Zone		USA	Canada

MAGNETRON, MOTOR ASSEMBLY, VENT BLOWER AND HIGH VOLTAGE TRANSFORMER

Oven must be removed from wall.

REMOVING OVEN FROM WALL (2 PEOPLE REQUIRED)

Oven is hooked on metal tabs at bottom of wall mounting plate and to cabinet by (3) top cabinet bolts.

3-1 Disassembly of Assembly Grille and Panel Outer

Parts	Explaination Photo	Explaination
Grille		**1.** Disconnect oven power. **2.** Remove Grille. **1)** Remove 2 screws **2)** Slide the Grille to the left, then pull it straght out.
	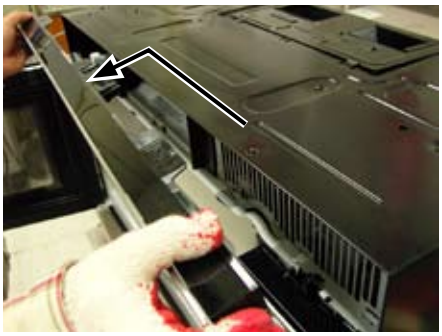	
Panel Outer		**1.** Disconnect oven power. **2.** Remove Grille. **3.** Remove Screw.(7)
		4. Remove Screw.(4)

3-1 Disassembly of Assembly Grille and Panel Outer

Parts	Explaination Photo	Explaination
Panel Outer	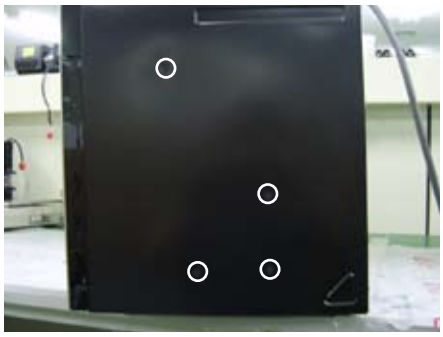	**5.** Remove Screw.(4)
		6. Remove Screw.(2)
		7. Remove Screw.(2)
	Explaination Photo	
	Explaination	
	8. Remove Panel Outer.	

3-2 Replacement of High Voltage Transformer and HVC and Base bottom

Parts	Explaination Photo	Explaination
High voltage capacitor	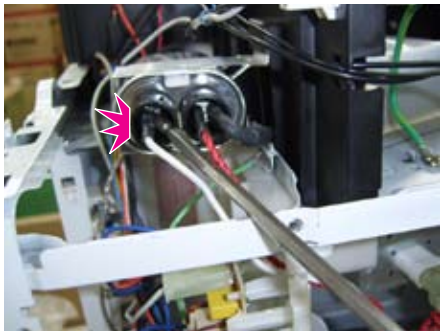	**1.** Disconnect Oven Power. **2.** Remove Panel Outer. **3.** Discharge The High Voltage Capacitor. ⚠ ATTENTION : When discharge must become ground terminal of HVC and metal of around.
	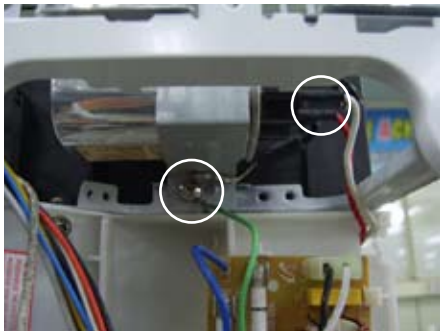	**4.** Remove screw.(1) **5.** Disconnect the Lead Wire.
Base Bottom		**1.** Remove Screw.(5) **2.** Disconnect Lamp Housing. **3.** Remove Base bottom.
HV Trans	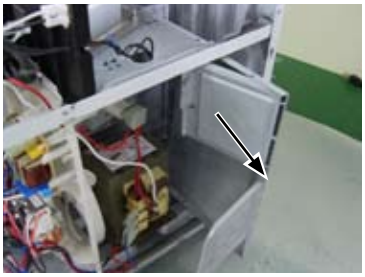	**1.** Disconnect Oven Power. **2.** Remove the Base bottom and Panel Outer. **3.** Disassembly the Bracket Duct upper after remove screw.

3-2 Replacement of High Voltage Transformer and HVC and Base bottom

Parts	Explaination Photo	Explaination
HV Trans	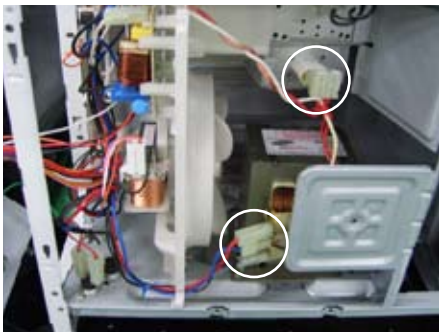	**4.** Disconnect the Lead Wire.
		5. Remove screw.(3) **6.** Take out the HV Trans.

3-3 Replacement of Magnetron

Parts	Explaination Photo	Explaination
Magnetron	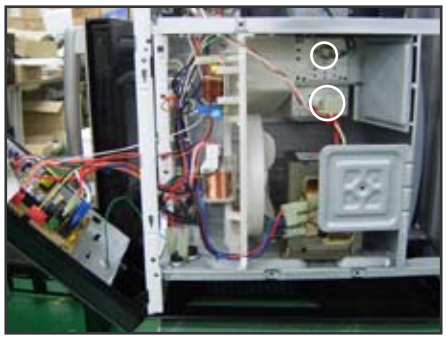	Remove the magnetron including the shield case, permanent magnet, choke coils and capacitors (all of which are contained in one assembly). **1.** Disconnect all lead wires from the magnetron.
	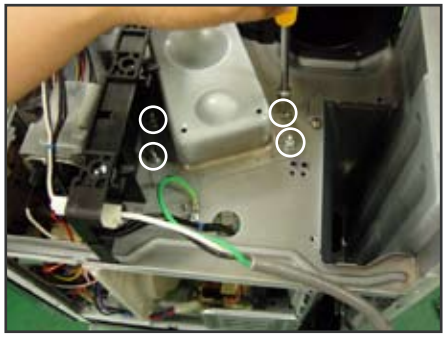	**2.** Remove nuts (4) securing the magnetron to the wave guide. **3.** Take out the magnetron very carefully.
NOTE1: When removing the magnetron, make sure that it antenna does not hit any adjacentparts, or it may be damaged. **NOTE2:** When replacing the magnetron, be sure to remount the magnetron gasket in the correct position and make sure the gasket is in good condition.		

PRECAUTION

During replacement, be certain R.F. anode gasket is in place around anode stub.

PERFORM MICROWAVE LEAKAGE TEST

3-4 Replacement of Door Assembly

Parts	Disassembly Photo	Explaination
Removal of Door Assembly	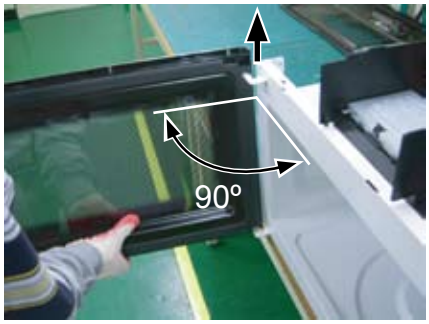	**1.** Open the Assembly Door by degree 90º **2.** Seperate lifting Assembly Door from Set.
Removal of Door C	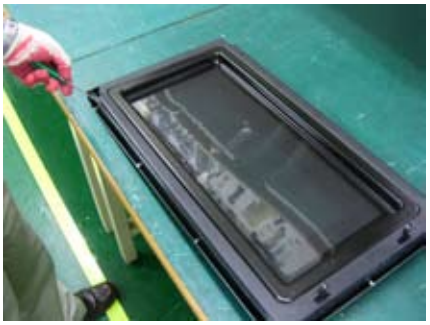 	**2.** Insert flat screwdriver into the gap between Door “A” and Door “C” to remove Door “C”. • Becareful when handling Door “C” because it is fragile.
Removal of Key Door & Spring	 	**3.** Detach the spring and key door from Door.

3-4 Replacement of Door Assembly

Removal of Handle	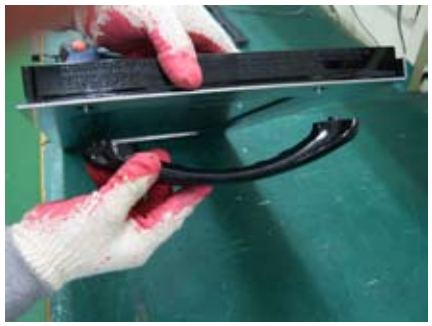	**4.** Remove 2 screws, then handle is detached from Door “A”.
Removal of Door “E”	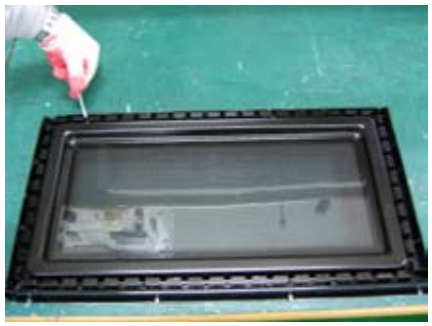	**5.** Following the procedure as shown in the figure, insert and bend a thin metal plate between Door “E” and Door “A” until you hear the ‘tick’ sound. • Insertion depth of the thin metal plate should be 0.5mm or less.

PRECAUTION

PERFORM MICROWAVE LEAKAGE TEST

3-5 Replacement of Fuse

Parts	Explaination Photo	Explaination
Fuse	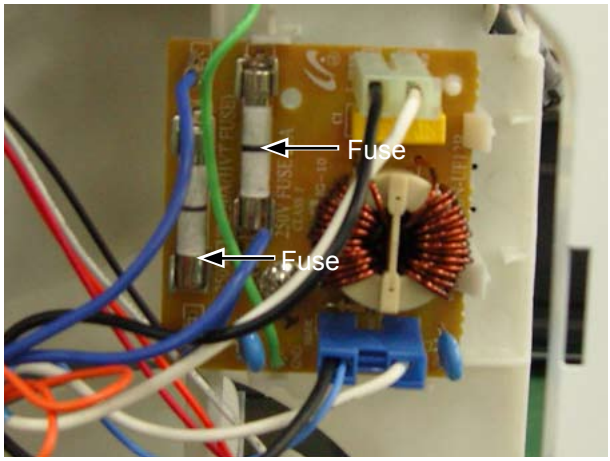	The fuse is located on the noise filter. **1.** Disconnect power and remove grilleand Assembly Control Box. **2.** Replace the fuse. **3.** When 20A fuse blows out by the operation of interlock monitor switch failure, replace the primary interlock switch, secondary interlock switch, door sensing switch, interlock monitor switch and power relay. **4.** When the above four switches operate properly, check if any other part such as the control circuit board, blower motor or high voltage transformer is defective.

3-6 Replacement of Drive Motor

Parts	Explaination Photo	Explaination
Drive Motor	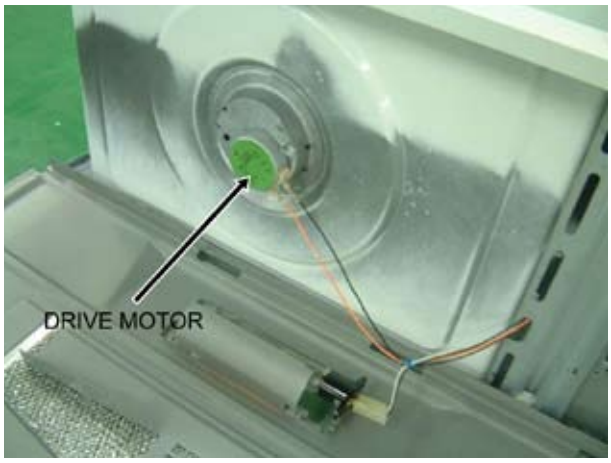	**1.** Disconnect power and remove Base bottom screws(5). **2.** Remove Base bottom and disconnect the turntable motor drive. **3.** Remove turntable motor screws(1) and pull the turntable motor out. **4.** When replacing the drive motor, be sure to remount it in the correct position with the coupler. **5.** Connect all the leads to the drive motor.

3-7 Replacement of stirrer motor

Parts	Explaination Photo	Explaination
Stirrer Motor		**1.** Disconnect power and remove Grille screws(3). **2.** Remove the bracket duct upper. **3.** Disconnect the stirrer motor wire. **4.** Remove stirrer motor screws(1) and after turn to arrow direction pull the stirrer motor.

3-8 Removal of stirrer

Parts	Explaination Photo	Explaination
Stirrer	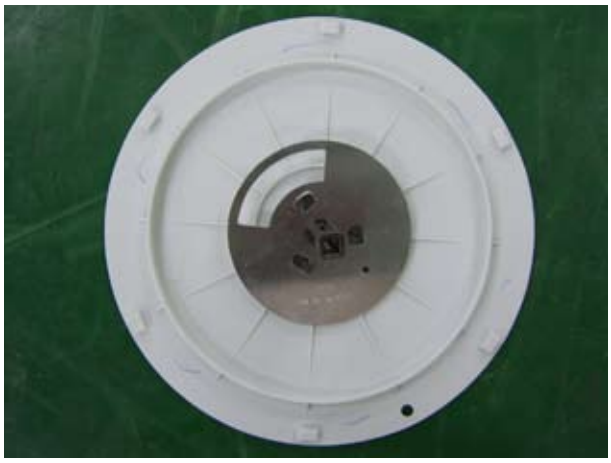	The stirrer is motor driver and located on the upper side of the cavity. The oven uses a top feed wave guide. The stirrer is located in the wave guide and the motor is located on the wave guide. **1.** Disconnect power and open the door. **2.** Remove the clip and turn the stirrer cover left. **3.** Remove stirrer cover and the stirrer will come with it.

3-9 Replacement of Control Circuit Board

Parts	Explaination Photo	Explaination
Removal of Control Box Assembly	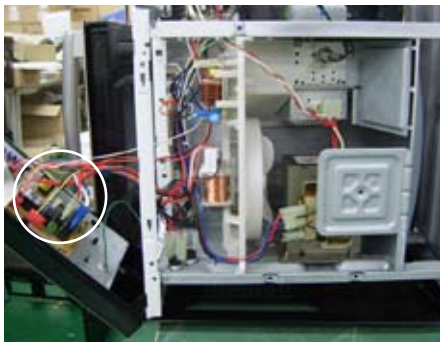	**1.** Disconnect power and remove Grille. **2.** Be sure to ground any static electric charge in your body and never touch the control circuit. **3.** Remove a screw securing the control box assembly. **4.** Disconnect the connectors from the control circuit board.
Removal of P.C.B Assembly	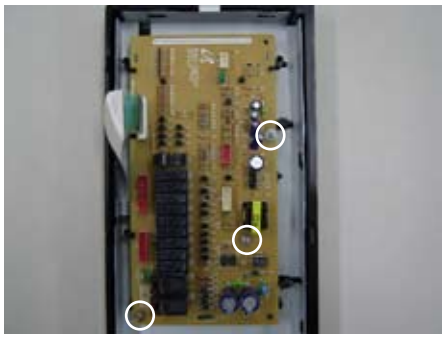	**1.** Pull the lever end of the plastic fastener and remove the Flexible Printed Circuit(FPC) of membrane panel. **2.** Remove screws (3) securing the control circuit board. **3.** Lift up the control circuit board from the Ass'y control box. **4.** When reconnecting the FPC connector, make sure that the holes on the connector are properly engaged with the hooks on the Plastic Fastener.

3-10 Replacement of Cooktop lamp

When replacing the night light, make sure that you are wearing gloves to avoid injury from the heat of the bulb.

Parts	Explaination Photo	Explaination
Cooktop Lamp	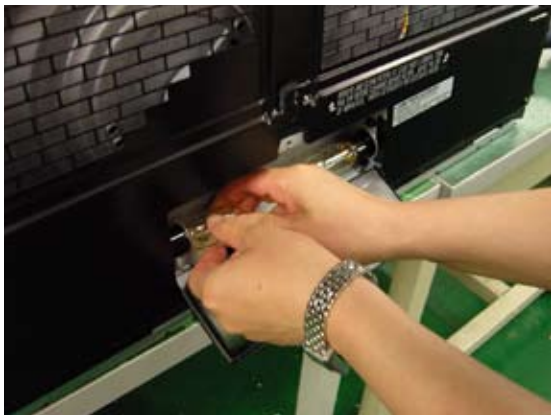 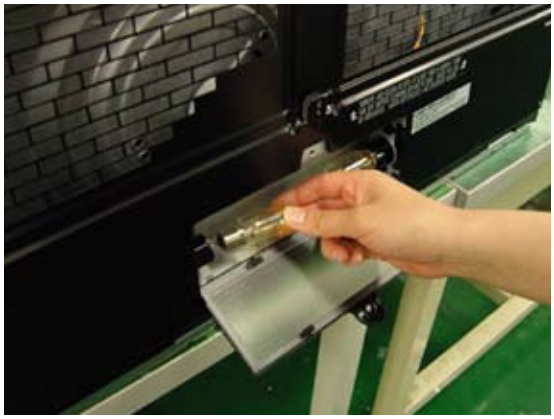	**1.** Unplug the oven or turn off the power at the main power. **2.** Remove the bulb cover, and mounting screws. **3.** Replace the bulb with a 40 watt appliance bulb. **4.** Replace the bulb cover and mounting screws. **5.** Turn the power back on at the main power supply.

3-11 Replacement of Oven Light

Parts	Explaination Photo	Explaination
Oven Light	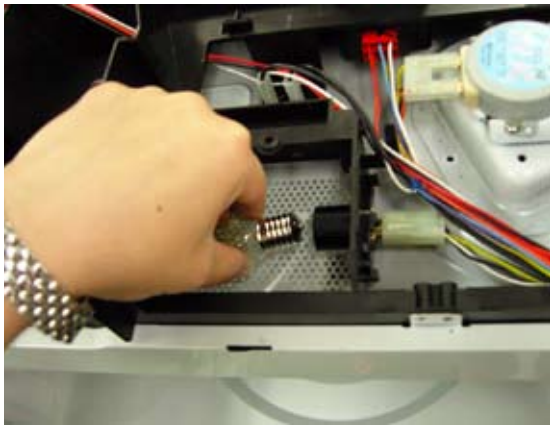	**1.** Disconnect Oven power. **2.** Remove the Grille **3.** Remove the bracket Duct upper by remove 1 screw. **4.** Replace the bulb with a 40 watt appliance bulb.

4-1 Error Code Numbering Rule

1. ERROR CODE NUMBERING RULE is applied to a microwave oven and an oven.(CMO, OTR, Grill, Convection, Commercial etc.)
2. All sensors and devices have their own number. ex) Gas Sensor = 1, Temp. Sensor = 2, ...
3. Of each device, No.1 and No.2 refer to “Open Error” (not sensed) and “Short Error”, respectively.
4. This numbering rule has been applied to models to have been developed since January, 1, 2005. (But, GE or Customize model are excluded.)

E	-	1	1
		DEVICE	**ERROR CASE**
		0- Others	1- Open
		1- Gas Sensor	2- Short
		2- Temp. Sensor	•
		3- Weight Sensor	•
		4- Easy/PH Sensor	•
		5- EEPROM	
		•	
		•	
		•	

4-2 Error Code List

Error Code	Others (E-0X, Letter)	Solution	Page
-SE-	Key Short Error (10 seconds)	Turn off set and restart.	21 Page

4-2-1 Key Short Error

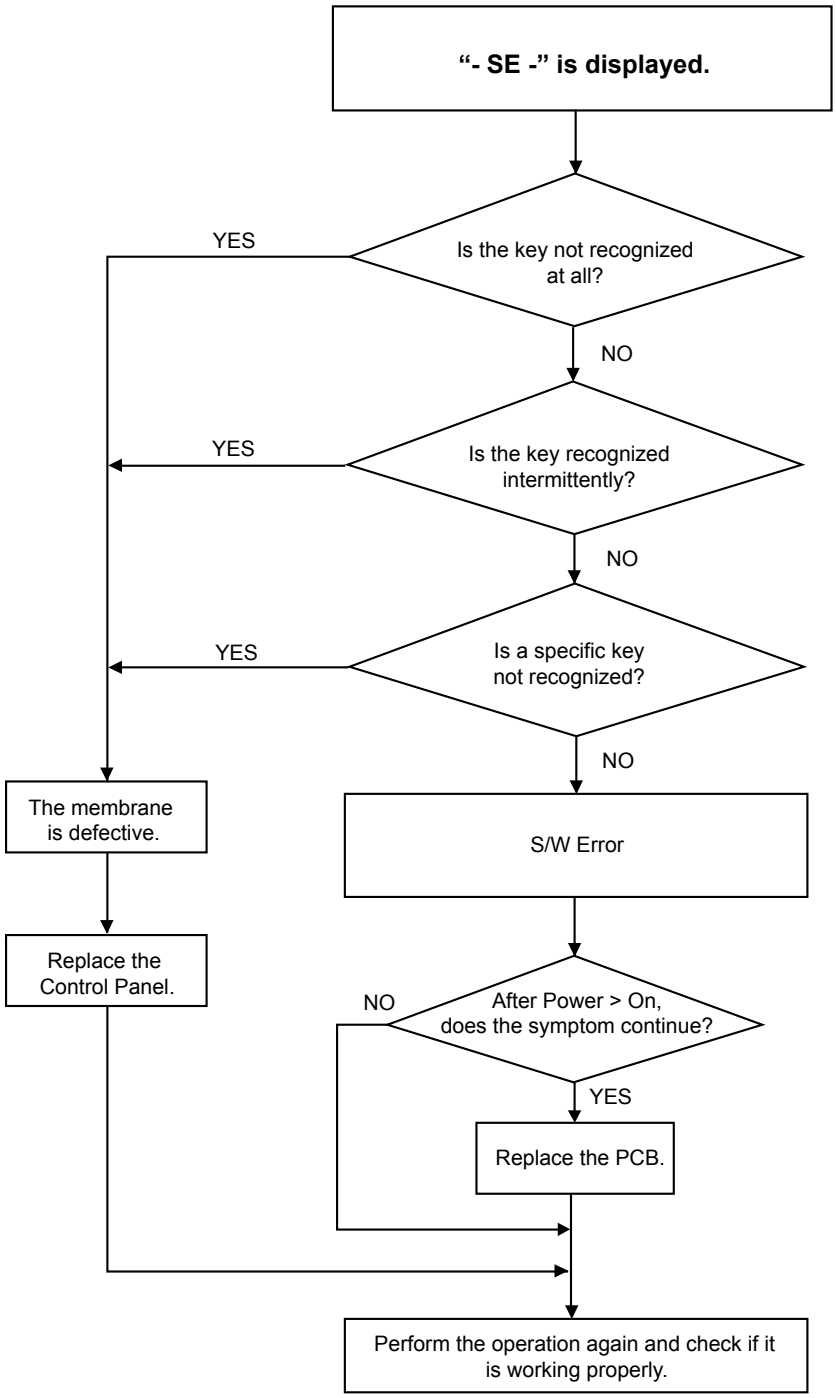

PRECAUTION

1. CHECK GROUNDING BEFORE CHECKING FOR TROUBLE.
2. BE CAREFUL OF THE HIGH VOLTAGE CIRCUIT.
3. DISCHARGE THE HIGH VOLTAGE CAPACITOR.
4. WHEN CHECKING THE CONTINUITY OF THE SWITCHES OR TRANSFORMER, DISCONNECT ONE LEAD WIRE FROM THESE PARTS AND THEN CHECK CONTINUITY WITHOUT THE POWER SOURCE ON. TO DO OTHERWISE MAY RESULT IN A FALSE READING OR DAMAGE TO YOUR METER.
5. DO NOT TOUCH ANY PART OF THE CIRCUIT OR THE CONTROL CIRCUIT BOARD, SINCE STATIC DISCHARGE MAY DAMAGE IT. ALWAYS TOUCH GROUND WHILE WORKING ON IT TO DISCHARGE ANY STATIC CHARGE BUILT UP.

4-3 Electrical Malfunction

Oven is dead. (No display and no operation at all.)

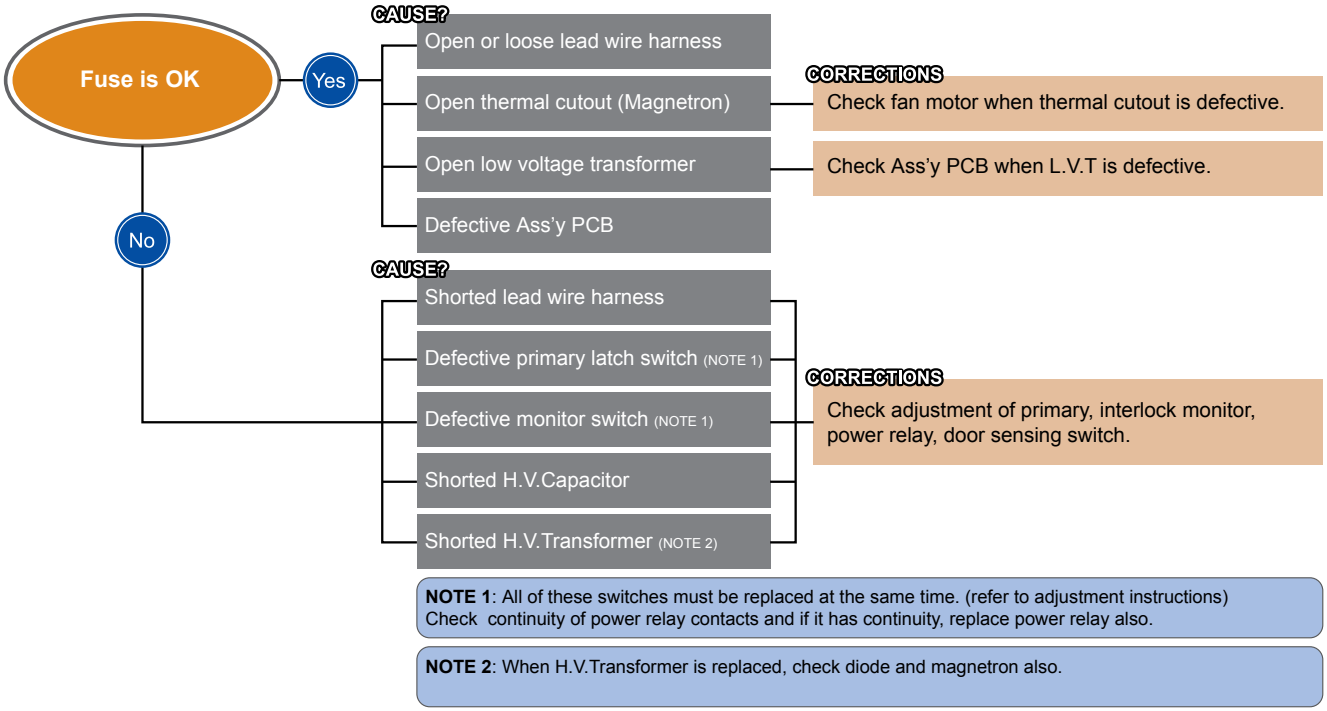

Oven does not accept key input (Program)

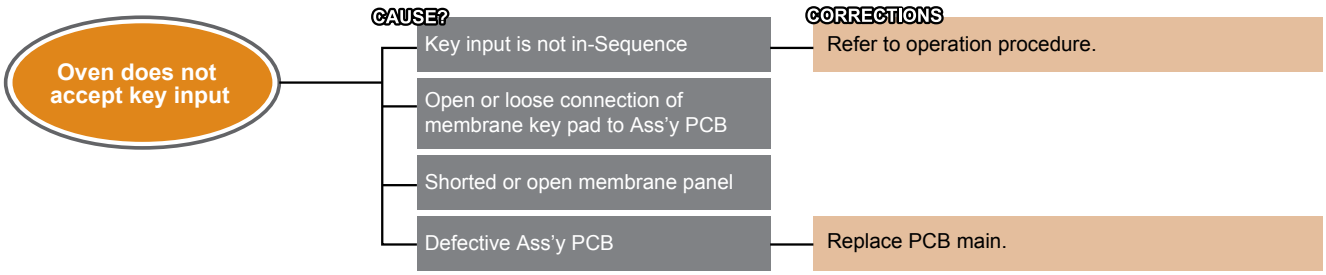

Timer starts countdown but no microwave oscillation.

(No heat while oven lamp and fan motor turn on.)

Timer starts countdown but no microwave oscillation

CAUSE?	CORRECTIONS
Off-alignment of latch switches	Adjust door and latch switches.
Open or loose connection of high voltage circuit especially magnetron filament circuit (NOTE)	Check high voltage component according to component test procedure and replace if it is defective.
Defective high voltage components H.V.Transformer H.V. Capacitor H.V.Diode, H.V.Fuse Magnetron	
Open or loose wiring of power relay	
Defective primary latch switch	
Defective power relay or Ass'y PCB	Replace PCB main.

NOTE: Large contact resistance will bring lower magnetron filament voltage and cause magnetron to lower output and/or intermittent oscillation.

Oven can program but timer does not start.

Oven can program but timer does not start

CAUSE?	CORRECTIONS
Open or loose wiring of secondary interlock switch	Adjust door and interlock switches.
Off-alignment of primary interlock	
Defective secondary interlock S/W	

Microwave output is low. (Oven takes longer time to cook food.)

Microwave output is low

CAUSE?	CORRECTIONS
Decrease in power source voltage	Consult electrician.
Open or loose wiring of magnetron filament circuit. (Intermittent oscillation)	
Aging of magnetron	

Fan motor turns on when plugged in.

Fan motor turns on when plugged in

CAUSE?	CORRECTIONS
Loose wiring of door sensing switch	Consult electrician.

Oven does not operate and return to the plugged in mode.

Oven does not operate and return to the plugged in mode

CAUSE?	CORRECTIONS
Defective Ass'y PCB	Replace PCB main.

Loud buzzing noise can be heard.

Loud buzzing noise can be heard

CAUSE?	CORRECTIONS
Loose fan and fan motor	Tighten screws of fan motor.
Loose screws on H.V.Transformer	Tighten screws of H.V.Transformer.
Shorted H.V.Diode	Replace H.V.Diode.

Turntable motor does not rotate.

Turntable motor does not rotate.

CAUSE?	CORRECTIONS
Open or loose wiring of turntable motor.	Replace turntable motor.
Defective turntable motor	

Oven stops operation during cooking.

Oven stops operation during cooking

CAUSE?	CORRECTIONS
Open or loose wiring of primary interlock switch	Adjust door and latch switches.
Operation of thermal cutout (Magnetron)	

Sparks.

Sparks

CAUSE?	CORRECTIONS
Metallic ware or cooking dishes touching on the oven wall	**Inform the customer**: Do not use any type of cookware with metallic trimming
Ceramic ware trimmed with gold or silver powder also causes sparks	

Uneven cooking.

Uneven cooking

CAUSE?	CORRECTIONS
Uneven intensity of microwave due to its characteristics	Wrap thinner parts of the food with aluminum foil.
	se plastic wrap or cover with a lid.
	Stir once or twice while cooking foods such as soup, cocoa, or milk.

Noise from the turntable motor when it starts to operate.

Noise from the turntable motor when it starts to operate.

CAUSE?	CORRECTIONS
Noise may result from the motor	Replace turntable motor.

5-1 Exploded Views

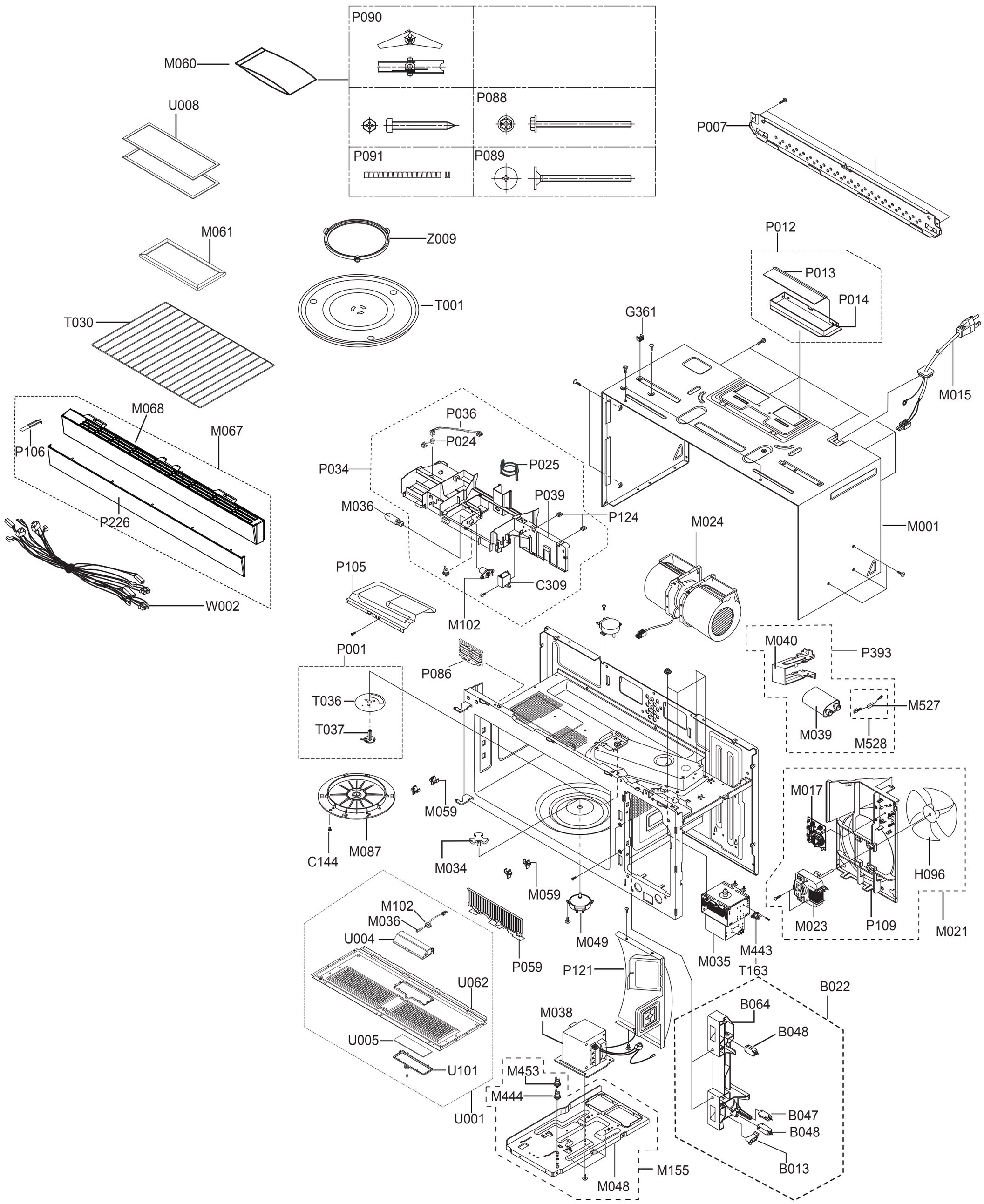

5-2 Main Parts List

(S.N.A : SERVICE NOT AVAILABLE)

No.	Code No.	Description	Specification	Q'ty	SA/SNA	Remark
B013	DE66-90106B	LEVER SWITCH-LOWER	OTR6,PP,T1.4,-,-,-,-,	1	SA	-
B022	DE96-00414A	ASSY BODY LATCH	RVM-1625BJ,-	1	SA	-
B047	3405-001033	SWITCH-MICRO	125/250VAC,16A,200gf,SPST-N	1	SA	-
B048	3405-001034	SWITCH-MICRO	125/250VAC,16A,200gf,SPST-N	2	SA	-
B064	DE66-00168A	LATCH-BODY	MODULAR-2,PP,-,-,-,-,-	1	SA	-
C144	DE66-20095B	BUTTON-LOCKING	-,-,OTR5,-,-,TB53)	1	SA	-
C309	DE59-50002A	C-FILM,LEAD-OTHER	10000nF,+10/-5%,220V,#	1	SA	-
G361	DE92-90508A	ASSY HOLDER-NUT	OTR6	1	SA	-
H012	DE61-50263A	BRACKET-TCO	-,SBHG1-A/SECC,-,-,-,-,-	1	SA	-
H024	DE60-30015A	NUT-FLANGE	-,MSWR10,P0.8,-,-,-,FEFZY,-,-	4	SA	-
H096	DE31-90051A	BLADE-FAN	-,PP,-,D130,-,T,-	1	SA	-
M001	DE64-00754J	PANEL-OUTER	MAYTAG2.0,SECC,T0.4,BLACK	1	SA	-
M015	DE96-00218A	ASSY POWER CORD	UL,Straight,125V/15A,SJT	1	SC	-
M017	DE96-00400B	ASSY NOISE FILTER	-,SN-UF12B,250V20A,OTR	1	SA	-
M021	DE97-00365P	ASSY COVER MOTOR	YMMV4203DB0,PP(V0)	1	SNA	-
M023	DE31-00044B	MOTOR FAN	SMF-U4205A,120V/60Hz,2820rpm,A	1	SNA	-
M024	DE31-00029B	MOTOR VENTILATION	SMV-460UA-1,SMH7175WE/	1	SNA	-
M034	DE67-00179A	COUPLER	SMH7175,SPS,BRN,-,-,-	1	SA	-
M035	OM75P(10)ESGN	ASSY-MGT		1		-
M036	4713-001013	LAMP-INCANDESCENT	130V,40W,ORG,25X73	1	SA	-
M036	4713-001013	LAMP-INCANDESCENT	130V,40W,ORG,25X73	2	SA	-
M038	DE26-00082D	TRANS H.V	SHV-U1870B,120V,60Hz,2460/2220	1	SNA	-
M039	2501-001202	C-OIL	0.83uF,2100V,BK,54x35x70mm,20mm	1	SA	-
M040	DE61-00115A	BRACKET-HVC	SMH7175,SECC,T0.6,-,-,-,-	1	SA	-
M048	DE61-00905A	BASE-PLATE	MAYTAG2.0,SECC,T0.6	1	SA	-
M049	DE31-10172B	MOTOR SYNCHRONOUS	SM16FBY36P1AW3,OTR,FRE	1	SA	-
M059	DE61-00375A	HOLDER-RACK	OTR-1.5CUFT,PP,-,-,-,-,-	4	SA	-
M060	DE92-90505E	ASSY HARD WARE	SMH7175,-,-	1	SC	-
M061	DE63-00367D	FILTER-CHARCOAL	SMH7175,AL,CARBON,T9,W15	1	SC	-
M067	DE94-01995A	ASSY GRILLE	SMH9187,PC,STS430,-	1	SA	-
M068	DE64-02067A	GRILLE	CYMA,PC,-,-,-,-,-,-	1	SA	-
M087	DE71-60121A	COVER-STIRRER	-,PP,T2.0,W7,L198,-,-,85G,	1	SA	-
M102	DE47-00006A	SOCKET-LAMP	-,OTR7,-,250V,75W,-,250Vx187	2	SA	-
M102	DE47-00006A	SOCKET-LAMP	-,OTR7,-,250V,75W,-,250Vx187	1	SA	-
M155	DE97-00677B	ASSY BASE PLATE	MMV5207,-,T0.6,BASE-PLAT	1	SA	-
M443	DE47-20007A	THERMOSTAT	NT-101,250V 10A/125V 15A,150(	1	SA	-
M444	DE47-20059A	THERMOSTAT	-,NT-101,250V 10A/125V 15A,-,	1	SA	-
M453	DE47-20034A	THERMOSTAT	-,NT-101,250V 10A/125V 15A,-,	1	SA	-
M527	DE59-00002A	DIODE-H.V	MWO ALL,2CL4512H,-,450mA 13KV,	1	SC	-
M528	DE91-70063D	ASSY HVD	MWO-GE,HV03-12,-,-,RED,-	1	SA	-
P001	DE97-00367A	ASSY STIRRER	SMH7175,H/STIRRER+B/STIRRER	1	SA	-
P007	DE70-00561A	PLATE-MOUNTING	GE 1.6 NEW APPEARANCE,GI,	1	SA	-
P012	DE92-90242D	ASSY-HOOD DAMPER	JVM-1870,-,JVM250BL OTR	1	SA	-
P013	DE71-60051B	COVER-DAMPER	JVM-1870,0.22,68,248.4,FESN	1	SNA	-

5-2 Main Parts List (Continued)

(S.N.A : SERVICE NOT AVAILABLE)

No.	Code No.	Description	Specification	Q'ty	SA/SNA	Remark
P014	DE72-40022A	DAMPER-MAIN	-,SECC,-,W28,L650,OTR4,-,T0.	1	SNA	-
P024	DE32-60011A	SENSOR GAS	TGS-880,-,-,-,-,-,-,-,-	1	SC	-
P025	DE61-90111A	HOLDER-SENSOR	-,POM(DURACON-M90-02),-,-,	1	SA	-
P034	DE97-00366J	ASSY DUCT UPPER	SMH9187,FH44N,SENSOR	1	SA	-
P036	DE39-40678D	WIRE HARNESS-S	SMH7185WG/XAA,120V60HZ,86	1	SA	-
P039	DE67-00168B	DUCT-UPPER	SMH7175,PP,BLK,T2.0	1	SA	-
P059	DE63-00419A	COVER-FRONT	MAYTAG2.0,SECC,T0.6,MAYTAG	1	SA	-
P086	DE61-01008A	BRACKET-BARRIER	MHC4/5,SECC,0.5,-,-,-,-	1	SA	-
P088	DE60-20022A	BOLT-TOGGLE	-,-,-,W3/16X75,-,MSWR,-,-,-	3	SNA	-
P089	DE60-20066A	BOLT-FLAT	-,MSWR10,-,L110,-,UNF1/4,-,-,-	3	SNA	-
P090	DE60-30022A	NUT-TOGGLE	-,WHT,ZPC2,-,-,-,-,-,-	3	SNA	-
P091	DE63-10011A	GROMMET	-,MS,-,-,-,DACB-16,-,-,-	1	SNA	-
P105	DE61-00410A	BRACKET-DUCT(U)	SMH7175,SECC,T0.5,W200,L	1	SA	-
P106	DE63-00538A	EARTH-GRILLE	CYMA,STS430,T0.15,-,-,-,-	1	SNA	-
P109	DE63-00141B	COVER-MOTOR	AMV5206BAB,PP(V0),MAYTAG 2.	1	SA	-
P121	DE61-00411B	BRACKET-DUCT REAR	NEW WAVE / MT 2.0,SECC	1	SA	-
P124	DE60-30063A	NUT-MOUNTING	-,S10C,M6.3,-,-,-,ZNC,-,-	2	SA	-
P226	DE64-02071A	INLAY-GRILLE	CYMA,STS201,T0.3,-,-,-,-	1	SNA	-
P393	DE97-00636B	ASSY HVC	MMV5207BCB,-,-,-,-,-	1	SNA	-
T001	DE74-20002A	TRAY-COOKING	-,GLASS,T6,NEG,PI360,1.2CUF	1	SC	-
T030	DE75-00036B	RACK-WIRE	SMH7175,SNCR,W315,D4	1	SA	-
T036	DE31-00023A	BLADE-STIRRER	SMH7175,ALP1050,-,-,PI82,T	1	SNA	-
T037	DE61-00505A	HOLDER-STIRRER	SMH7175,SPS,-,-,-,-,-	1	SNA	-
T163	DE91-70101E	ASSY THERMOSTAT	164D5312G013,-,-,160/60,	1	SA	-
U001	DE97-00675K	ASSY BASE BOTTOM	SMH7185BG/XAC,-,-,NW2,S	1	SNA	-
U004	DE61-00407A	BRACKET-BOTTOM LAMP	SMH7175,SECC,T0.4,-,	1	SA	-
U005	DE64-00911A	GLASS-COOK TOP LAMP	SMH7175,TEMP-GLASS,T	1	SA	-
U008	DE63-00196A	FILTER-AIR	SMH7175,AL-MESH,T2.0,W150,L34	2	SA	-
U062	DE61-00406F	BASE-BOTTOM	MAYTAG2.0,SECC,T0.4,BLK,COAT	1	SA	-
U101	DE63-00137B	COVER-GLASS COOKTOP	SMH7175,SECC,T0.5,W9	1	SC	-
W002	DE96-00533G	ASSY WIRE HARNESS-A	SMH9187,120V/60Hz,CY	1	SNA	-
Z009	DE97-00368A	ASSY GUIDE ROLLER	SMH7175,SPS,-,-,-,-,G/	1	SA	-

5-3 Door Parts List

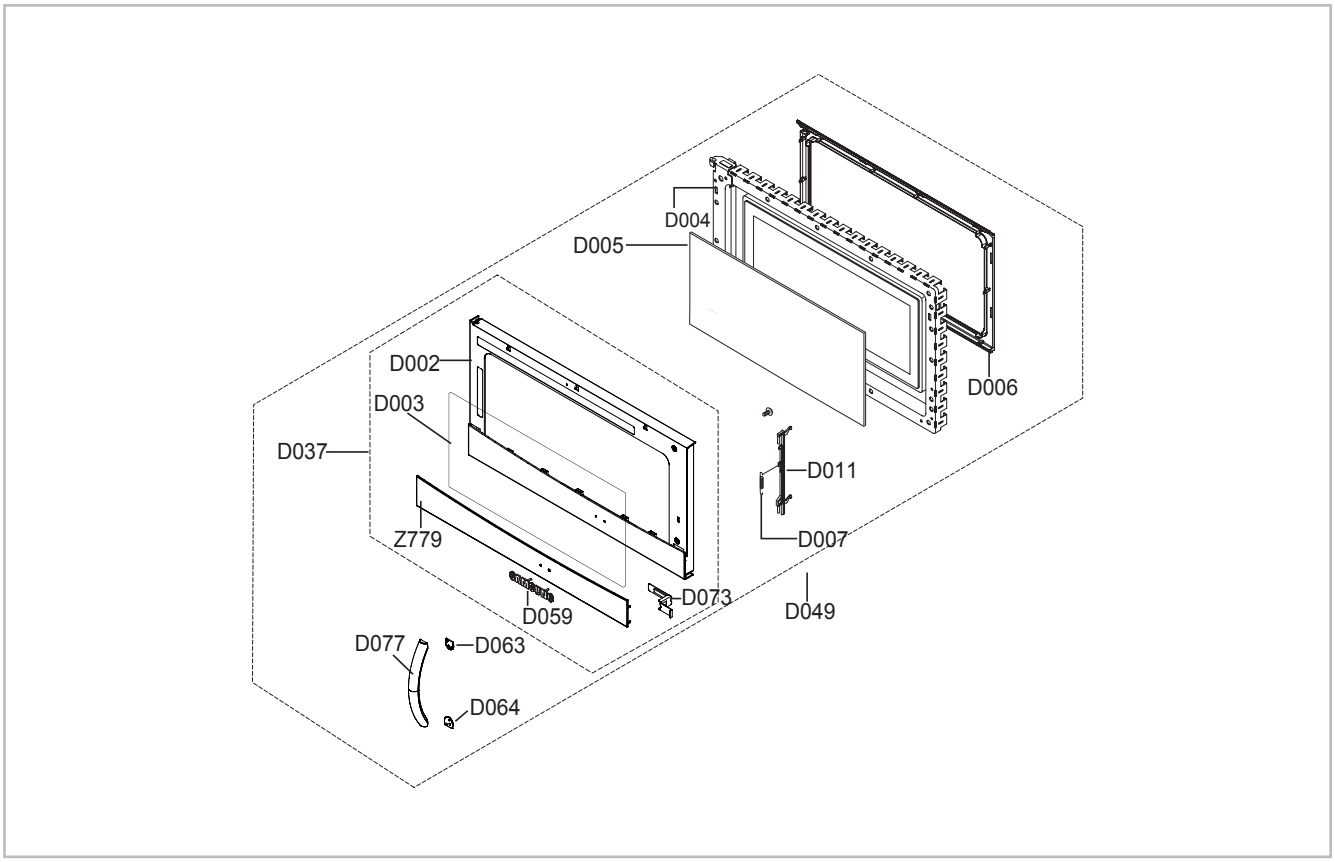

(S.N.A : SERVICE NOT AVAILABLE)

No.	Code No.	Description	Specification	Q'ty	SA/SNA	Remark
D002	DE64-02065A	DOOR-A	CYMA,PC,-,-,-,-,-,-	1	SA	-
D003	DE64-02231A	SCREEN-DOOR	SMH9187,REINFORCE GLASS,T3.2	1	SA	-
D004	DE94-01470B	ASSY DOOR E	SMH7175,-,-,COATING	1	SA	-
D005	DE01-00127A	FILM-DOOR	JVM-1860,POLYESTER,PET,L479,T0	1	SA	-
D006	DE64-00759A	DOOR-C	SMH7175,PP,T1.5,-,-,-,BLK,-	1	SA	-
D007	DE61-00048A	SPRING-KEY	-,HSWR,PI0.95,-,D8.75,L43,-,-	1	SA	-
D011	DE64-01308A	DOOR-KEY	MODULAR-2,POM,-,-,-,-,BLK,-	1	SA	-
D037	DE94-01996A	ASSY DOOR A	SMH9187,PC,STS430,-	1	SA	-
D049	DE94-01997C	ASSY DOOR	SMH9187,PC,STS,-	1	SA	-
D059	DE64-02228A	BADGE-LOGO	SMH9187,AL1070 H16,T1.3,W10,L	1	SNA	-
D063	DE64-02220A	HANDLE-BASE UPPER	SMH9207,PC,-,-,-,-,BLK	1	SA	-
D064	DE64-02243A	HANDLE-BASE LOWER	SMH9207,PC,-,-,-,-,BLK	1	SA	-
D073	DE63-00539A	EARTH-DOOR	CYMA,STS430,T0.15,-,-,-,-	1	SNA	-
D077	DE64-02224A	HANDLE-TUBE	SMH9187,AI	1	SA	-
Z779	DE64-02069A	INLAY-DOOR	CYMA,STS201,T0.3,-,-,-,-	1	SNA	-

5-4 Control Parts List

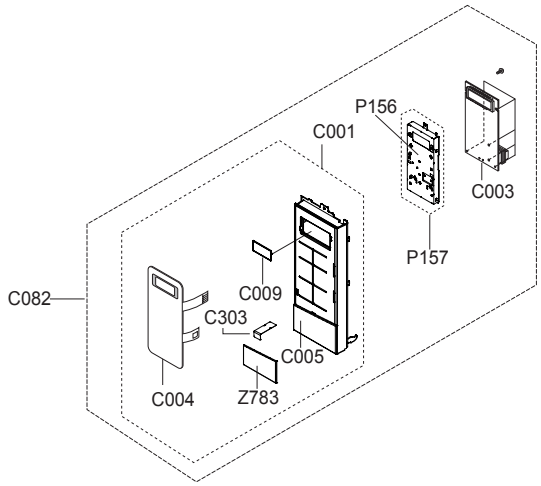

(S.N.A : SERVICE NOT AVAILABLE)

No.	Code No.	Description	Specification	Q'ty	SA/SNA	Remark
C001	DE94-02001C	ASSY CONTROL PANEL	SMH9187,STS,PC,-	1	SNA	-
C003	RAS-SM7MGV-07	ASSY PCB PARTS	SMH9187,SMPS,120V60HZ	1		-
C004	DE34-00330C	SWITCH MEMBRANE	SMH9187B/XAA,PC,120V / 6	1	SA	-
C005	DE64-02066C	CONTROL-PANEL	SMH9187B/XAA,PC,BLACK,CYMA	1	SA	-
C009	DE64-02086A	WINDOW-DISPLAY	CYMA,SAN,-,-,-,-,-,-	1	SA	-
C082	DE94-01999C	ASSY CONTROL BOX	SMH9187,120V60HZ,STS,PC	1	SNA	-
C303	DE63-00540A	EARTH-CONTROL	CYMA,STS430,T0.15,-,-,-,-	1	SNA	-
P157	DE94-02002A	ASSY BRACKET C/PANEL	SMH9187,SECC,T0.4,-	1	SA	-
Z783	DE64-02070A	INLAY-CONTROL	CYMA,STS201,T0.3,-,-,-,-	1	SNA	-

5-5 Standard Parts List

(S.N.A : SERVICE NOT AVAILABLE)

Level	Code No.	Description	Specification	Q'ty	SA/SNA	Remark
1-1	6002-000643	SCREW-TAPPING	TH,+,NO,2S,M4,L10,ZPC(WHT)	2	SNA	-
1-1	6002-001173	SCREW-TAPPING	FH,+,2S,M4,L12,ZPC(BLK),MS	8	SNA	-
1-1	6003-001568	SCREW-TAPTYPE	FH,TORX,B,M4,L16,NI PLT,SW	2	SNA	-
1-1	6006-001170	SCREW-TAPPING	TH,+,WT,TC,M4,L10,ZPC(WHT)	2	SA	-
1-1	DE60-10045A	SCREW-TAPPING	PH,M3,FEFZY	2	SA	-
1-1	DE60-10051A	SCREW-TAPPING	PH,+,M4,L6,NI PLT,SWRCH18A	2	SA	-
1-1	DE60-10062A	SCREW-TAPPING	TH,M4,FEFZB	3	SNA	-
1-1	DE60-10067A	SCREW-TAPPING	TH,2-SLOT,M4,2-SLOT,FEFZB	9	SA	-
1-1	DE60-10080A	SCREW-TAPPING	PWH,+,-,2S,M5,L9,-,SWRCH18	3	SA	-
1-1	DE60-10082I	SCREW-A	2S-4X12,FEFZY	16	SA	-
1-1	DE60-30015A	NUT-FLANGE	-,MSWR10,P0.8,-,-,-,FEFZY,-,-	4	SA	-
1-1	DE92-90508A	ASSY HOLDER-NUT	OTR6	1	SA	-
1-2	DE60-10111A	SCREW-INCH MACH	UNC1/4,L50,SWRCH18A	1	SNA	-
1-2	DE60-20022A	BOLT-TOGGLE	-,-,-,W3/16X75,-,MSWR,-,-,-	3	SNA	-
1-2	DE60-20066A	BOLT-FLAT	-,MSWR10,-,L110,-,UNF1/4,-,-,-	3	SNA	-
1-2	DE60-30022A	NUT-TOGGLE	-,WHT,ZPC2,-,-,-,-,-,-	3	SNA	-
1-2	6001-002033	SCREW-MACHINE	TH,+,M4,L16,ZPC(BLK),SWRCH	2	SNA	-
1-2	6002-000630	SCREW-TAPPING	PH,+,-,2S,M3,L8,ZPC(WHT),S	3	SNA	-
1-2	6006-001170	SCREW-TAPPING	TH,+,WT,TC,M4,L10,ZPC(WHT)	1	SA	-
1-2	DE60-10067A	SCREW-TAPPING	TH,2-SLOT,M4,2-SLOT,FEFZB	1	SA	-
1-2	DE60-10045A	SCREW-TAPPING	PH,M3,FEFZY	1	SA	-
1-2	DE60-10045A	SCREW-TAPPING	PH,M3,FEFZY	1	SA	-
1-2	6002-001004	SCREW-TAPPING	TH,+,-,2,M4,L30,ZPC(WHT),S	2	SA	-
1-2	DE60-10082I	SCREW-A	2S-4X12,FEFZY	1	SA	-
1-2	DE60-30063A	NUT-MOUNTING	-,S10C,M6.3,-,-,-,ZNC,-,-	2	SA	-

6-1 PCB Diagrams

(This Document can not be used without Samsung's authorization)

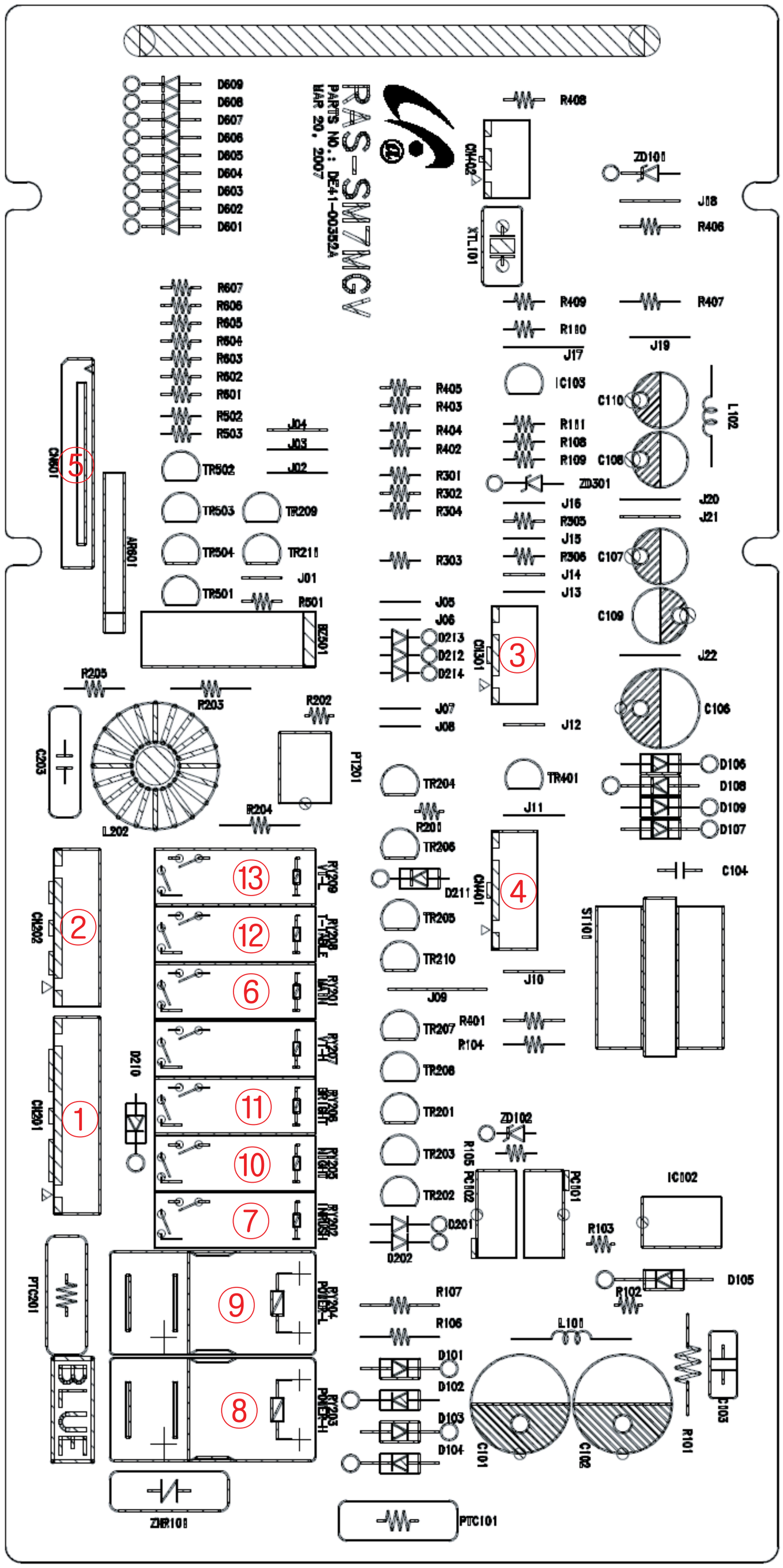

No.	Parts Number	Part Name	Function and Rule
1	CN201	A Terminal for connecting with SMPS Power Supply	A Terminal for Connecting with Inrush Relay, Lamp, Louver and SMPS Power Supply
2	CN202	A Terminal for connecting with T/T and Vent	A Terminal for Connecting with T/T, Vent and SMPS Power supply
3	CN301	A Terminal for connecting with Gas-Sensor	A Terminal for Detecting Gas-Sensor and SMPS Power supply
4	CN401	A Terminal for connecting with Door	A Terminal for Connecting Door and SMPS Power supply
5	CN601	A Terminal for connecting with Connector	A Terminal for Connecting with Connector and SMPS Power Supply
6	RY201	Main Relay	Power Supply Relay
7	RY202	Inrush Relay	Inrush Electric Current Decrease Device
9	RY203	Power-High Relay	MWO Control Relay (Power High)
9	RY204	Power-Low Relay	MWO Control Relay (Power Low)
10	RY205	Night Relay	Lamp Control Relay
11	RY206	Bright Relay	Lamp Control Relay
12	RY207	Louver Relay	Louver Control Relay
13	RY209	Vent-High Relay	Vent Control Relay (Vent high)

6-2 PCB Diagrams

(This Document can not be used without Samsung's authorization)

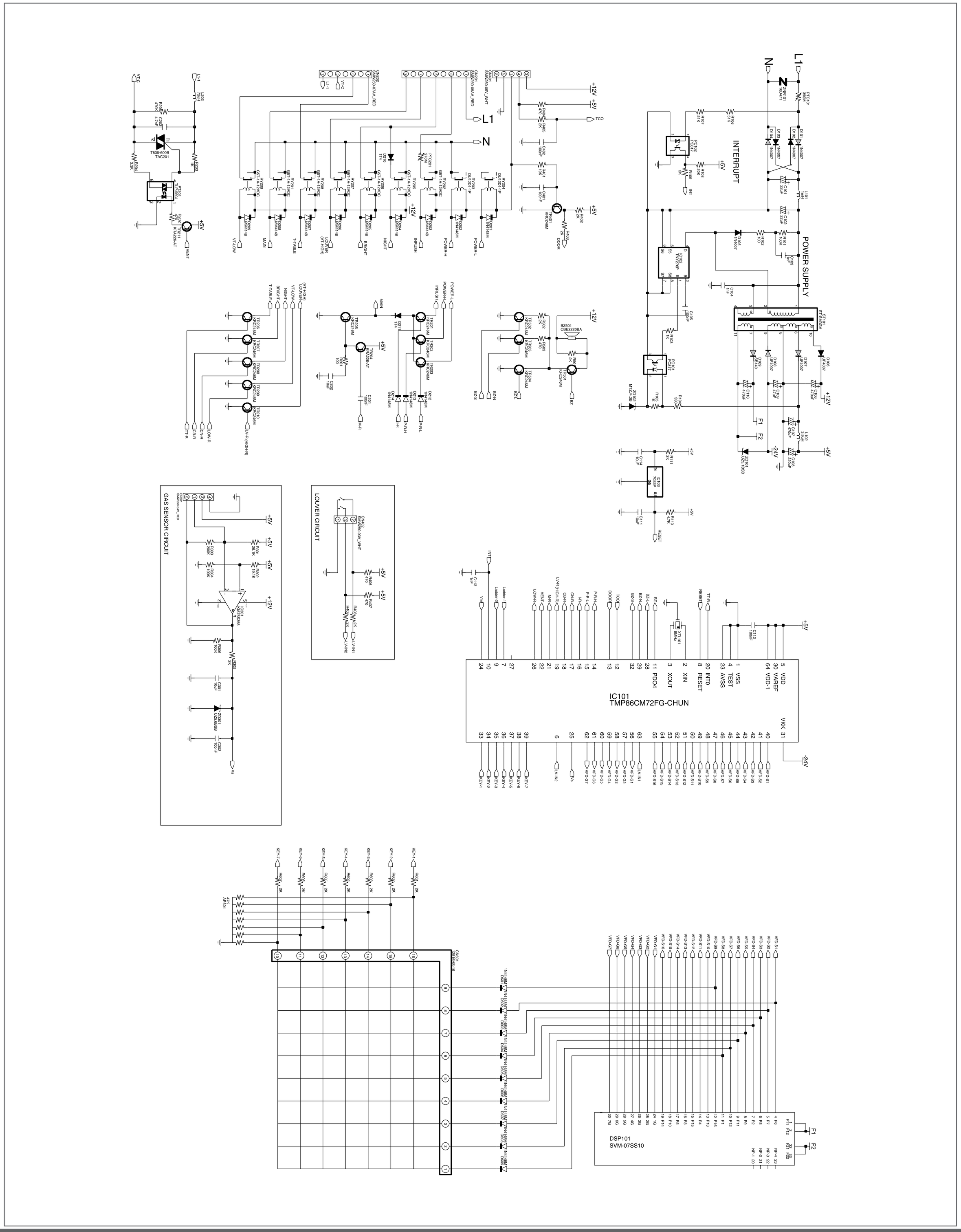

7-1 Wiring Diagrams

(This Document can not be used without Samsung's authorization)

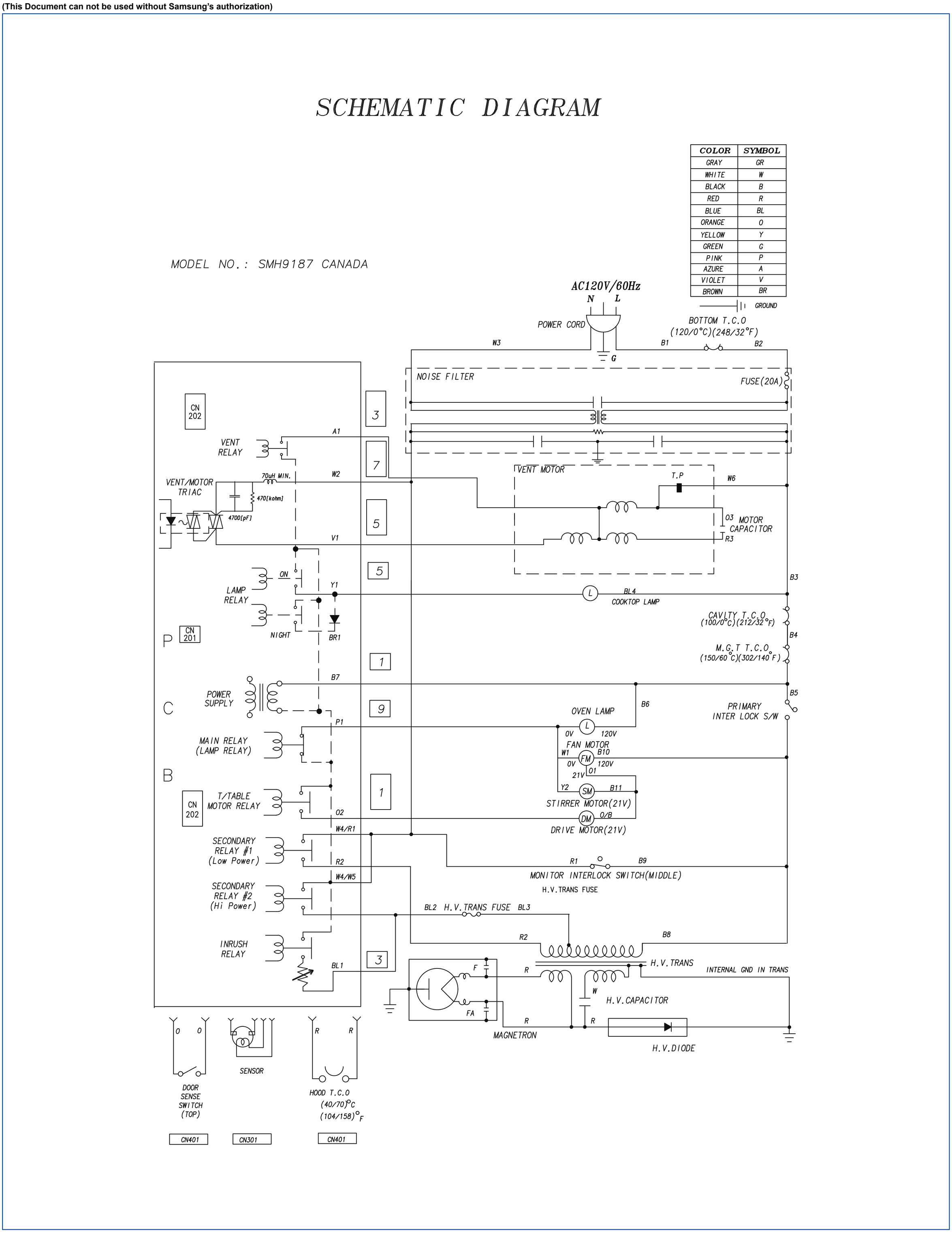

7-1 Wiring Diagrams

(This Document can not be used without Samsung's authorization)

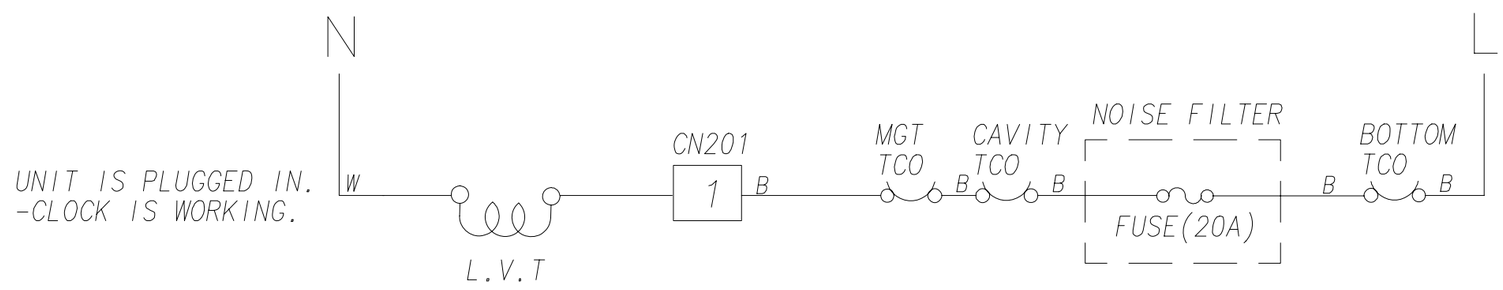

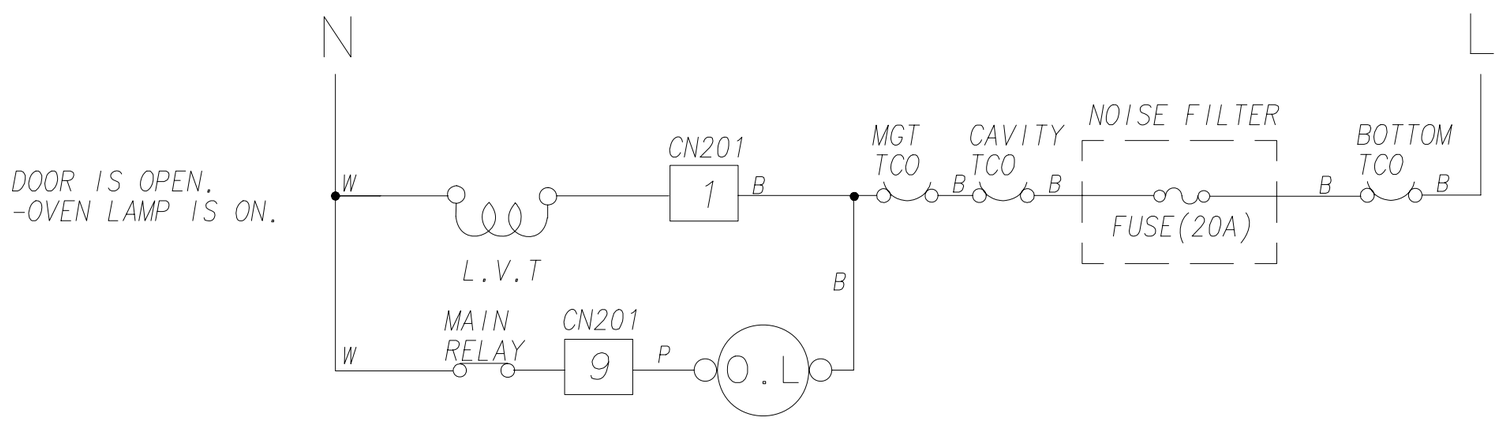

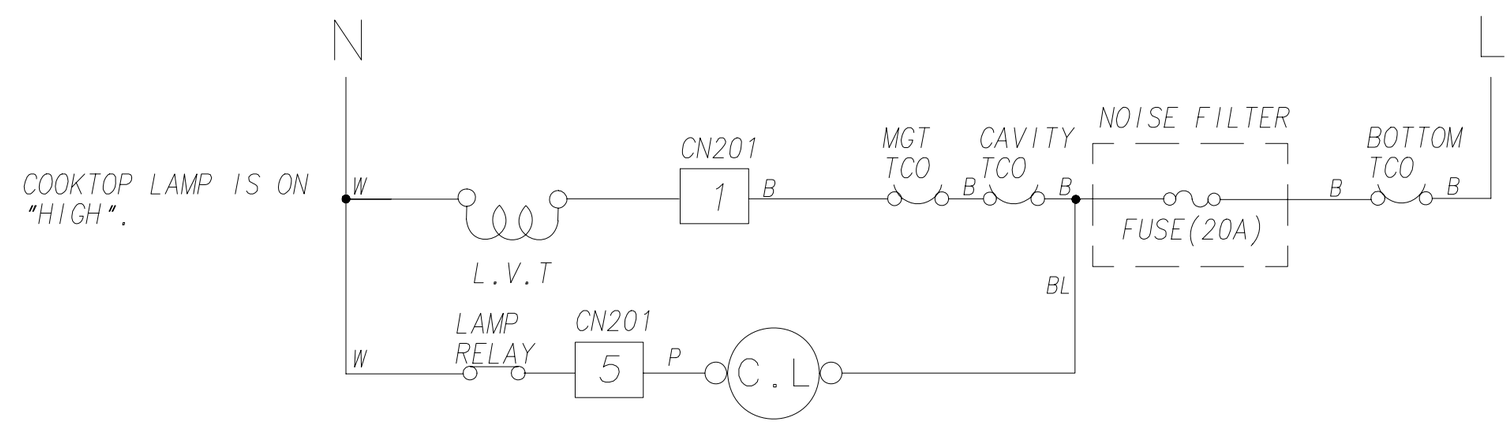

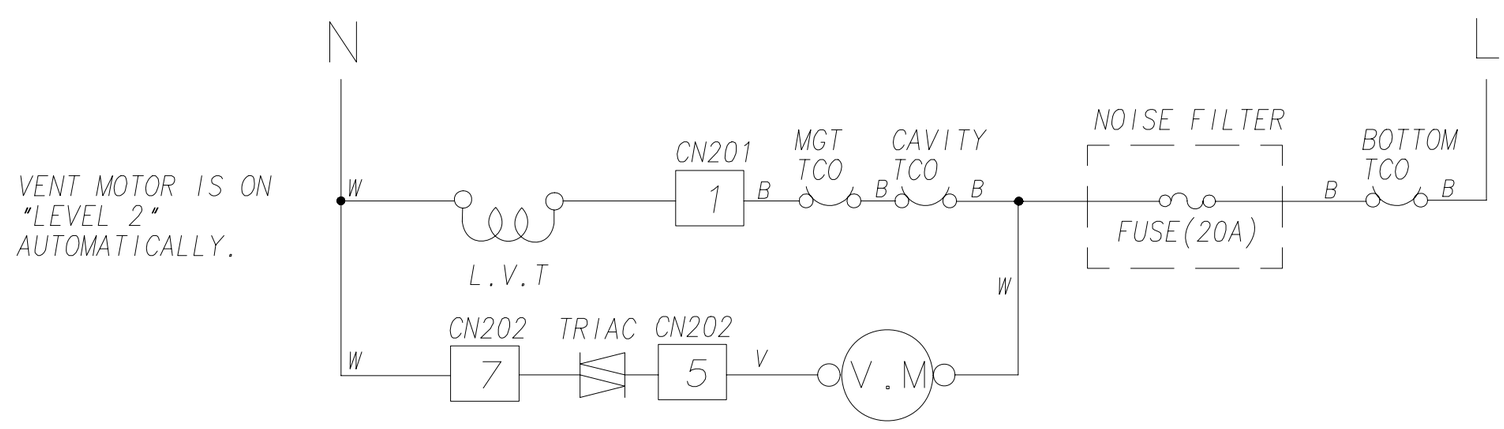

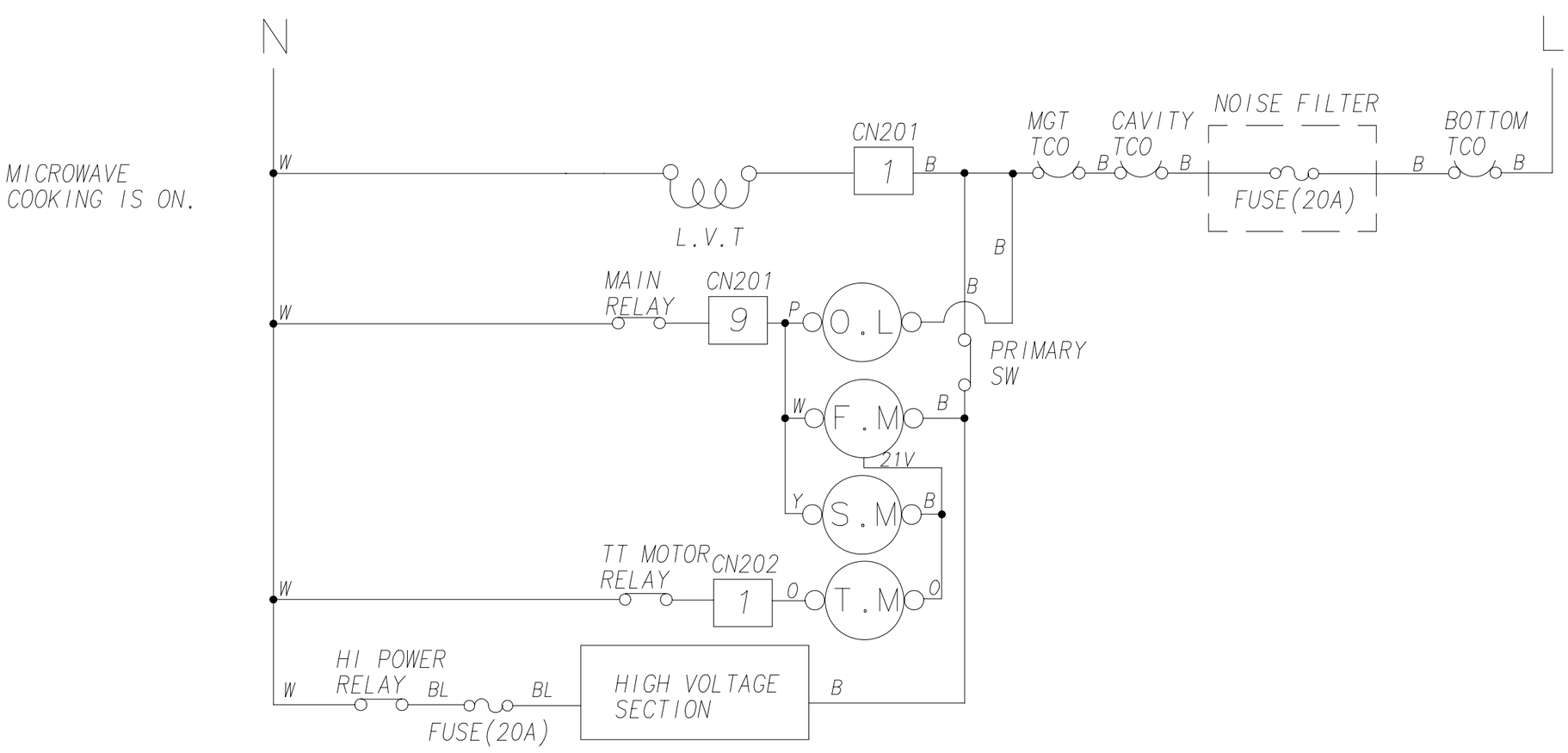

8-1 Schematic Diagrams

(This Document can not be used without Samsung's authorization)

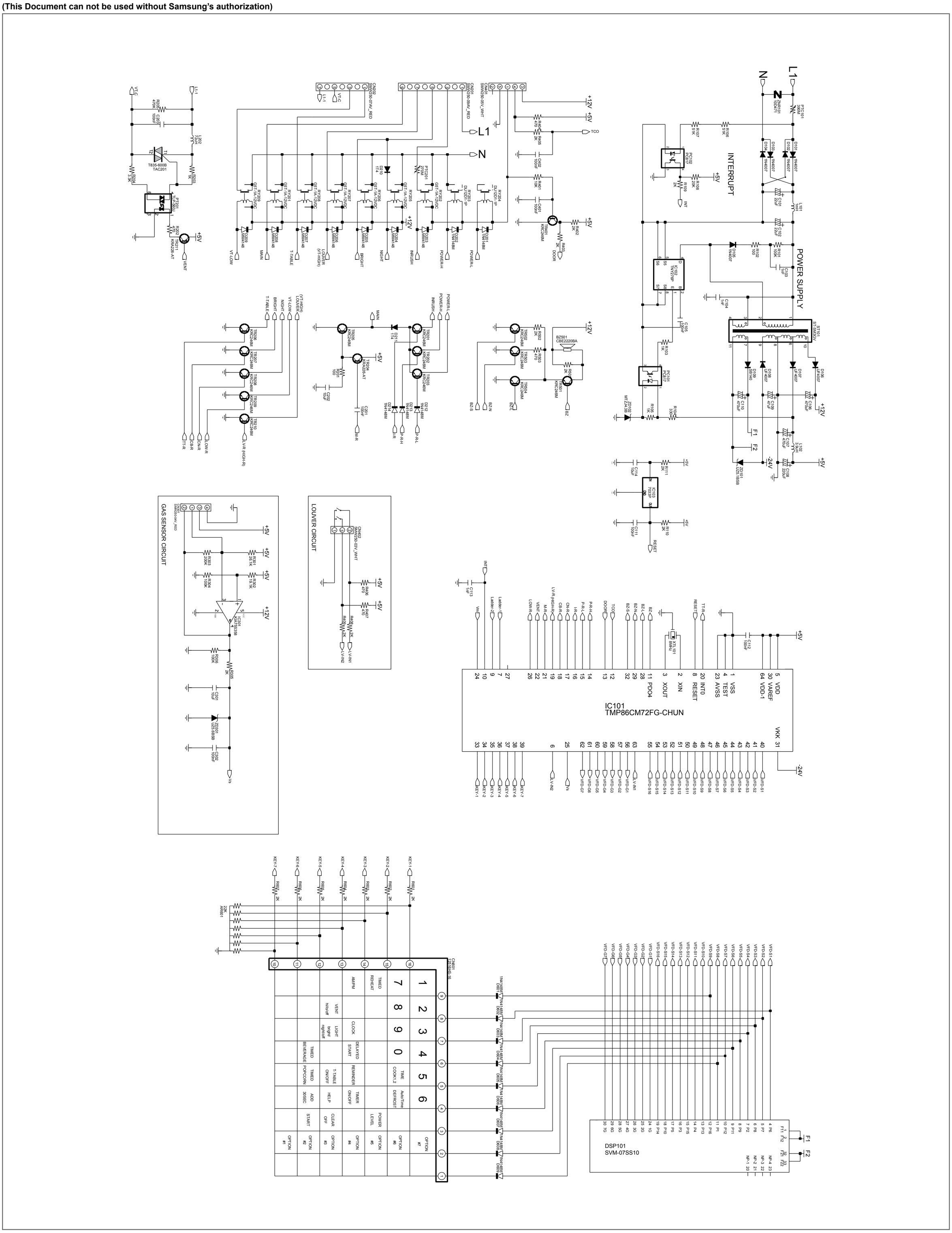

GSPN (Global Service Partner Network)

Contry	Web Site
North America	service.samsungportal.com
Latin America	latin.samsungportal.com
CIS	cis.samsungportal.com
Europe	europe.samsungportal.com
China	china.samsungportal.com
Asia	asia.samsungportal.com
Mideast & Africa	mea.samsungportal.com

This Service Manual is a property of Samsung Electronics Co.,Ltd. Any unauthorized use of Manual can be punished under applicable International and/or domestic law.

© Samsung Electronics Co., Ltd. March. 2010
Printed in Korea
Code No. : DE68-05781A